# Schöck Isokorb® XT/T type K-U

# Installation instructions – balcony connected to the wall above

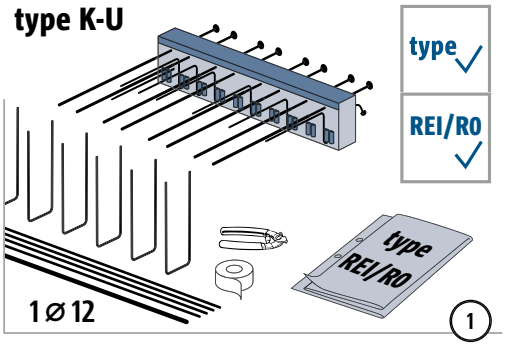


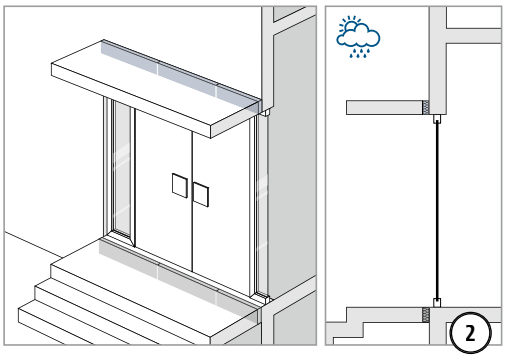


| type K-U | CV35, CV30 | |
|---|---|---|
| H | LR | t |
| 160 – 190 mm | 155 mm | ≥ 175 mm |
| 200 – 210 mm | 180 mm | ≥ 200 mm |
| 220 – 230 mm | 200 mm | ≥ 220 mm |
| 240 – 250 mm | 220 mm | ≥ 240 mm |

Note minimum wall thickness t.

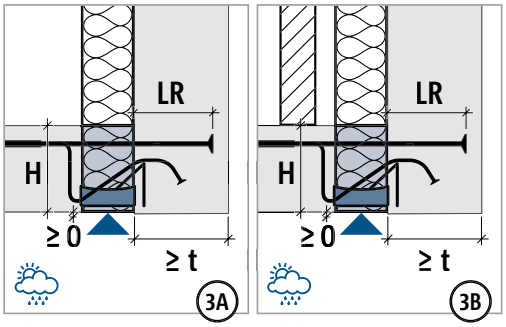


Position lower edge Isokorb® same as or above lower edge of the wall.

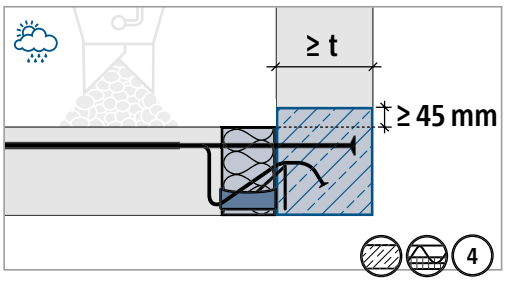


No working joint in the marked area, neither horizontal nor vertical. Concrete marked area in one pour!

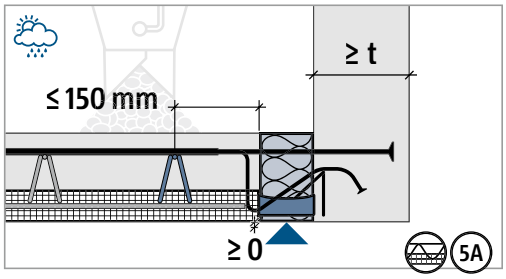


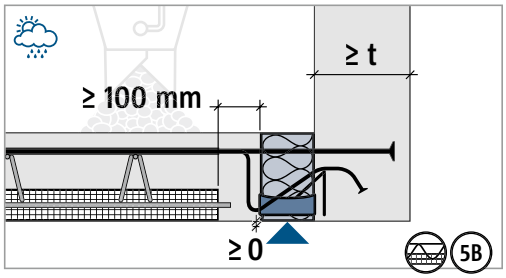


Without fail fill compression joint with in-situ concrete! Joint width ≥ 100 mm. Wall thickness ≥ t.

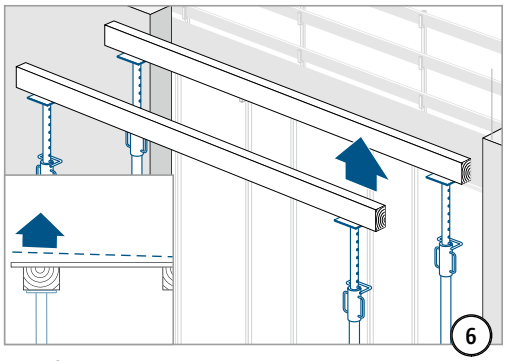


Step formwork in accordance with work plan.

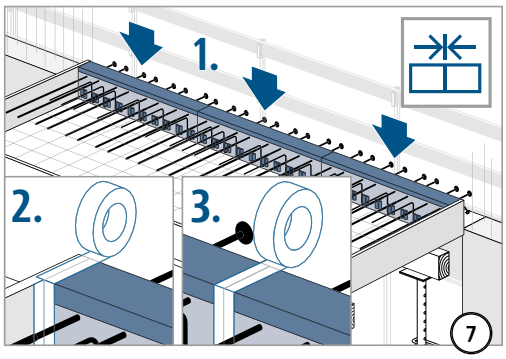


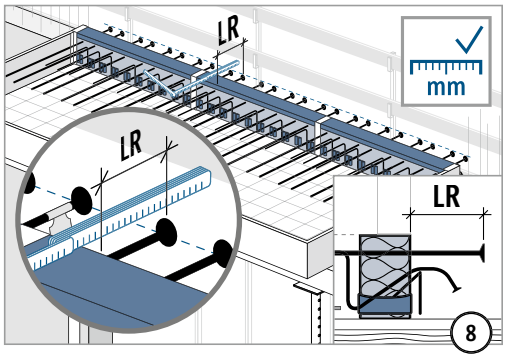


Check bond LR in accordance with type label!

# Installation instructions – balcony connected to the wall above

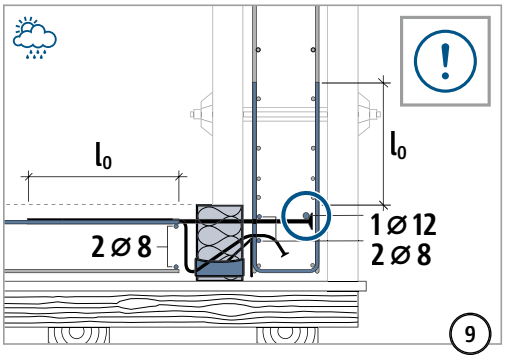


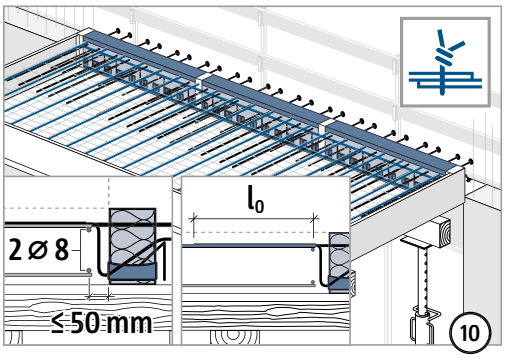


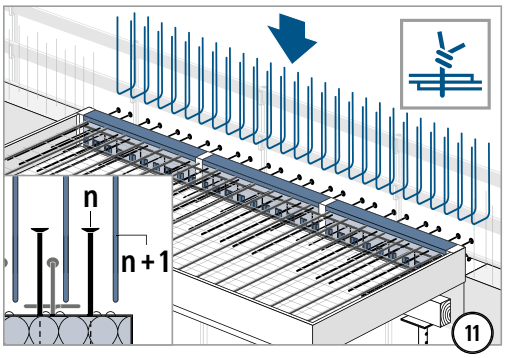


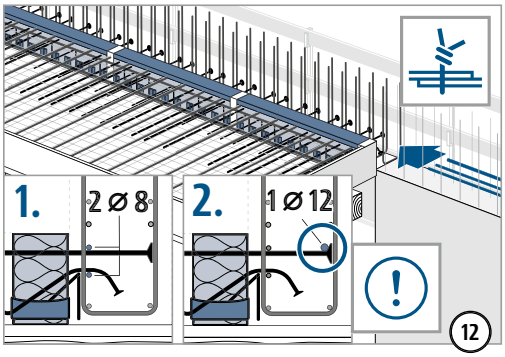


Tie supplementary bars with ⌀ ≥ 8 mm at crossing points. Tie supplementary bar with ⌀ ≥ 12 mm directly to tension bar using anchor head!

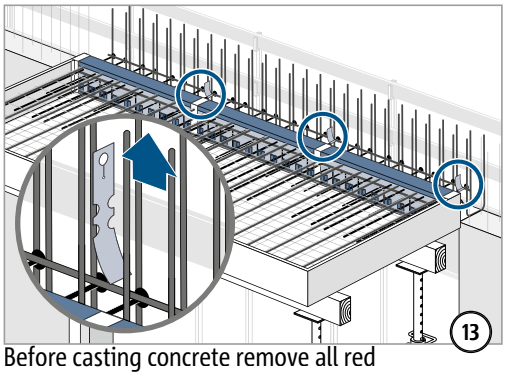


Before casting concrete remove all red warning notices!

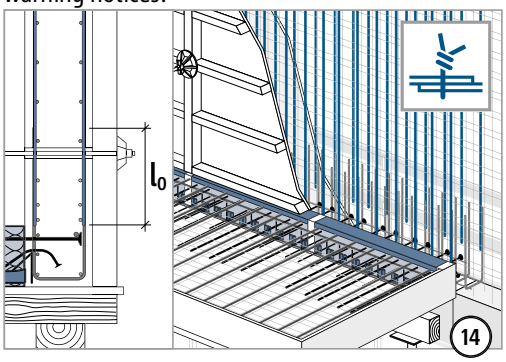

# Installation instructions – balcony with height offset downwards

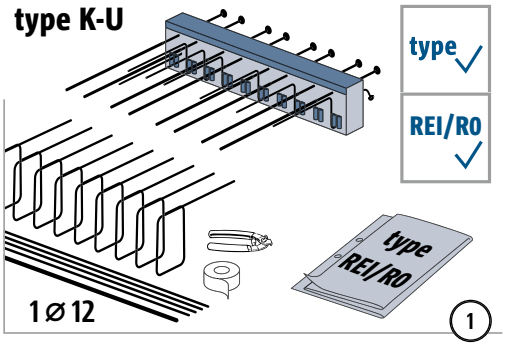


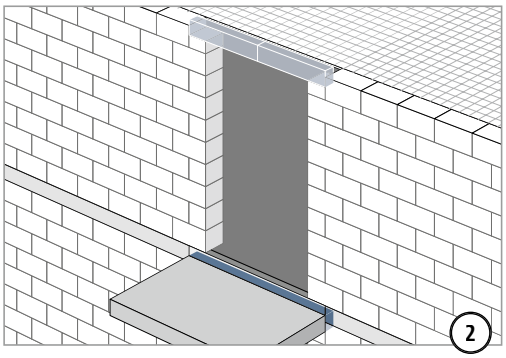


| type K-U | CV35, CV30 | |
|---|---|---|
| H | LR | t |
| 160 – 190 mm | 155 mm | ≥ 175 mm |
| 200 – 210 mm | 180 mm | ≥ 200 mm |
| 220 – 230 mm | 200 mm | ≥ 220 mm |
| 240 – 250 mm | 220 mm | ≥ 240 mm |

Note minimum downstand beam thickness t.

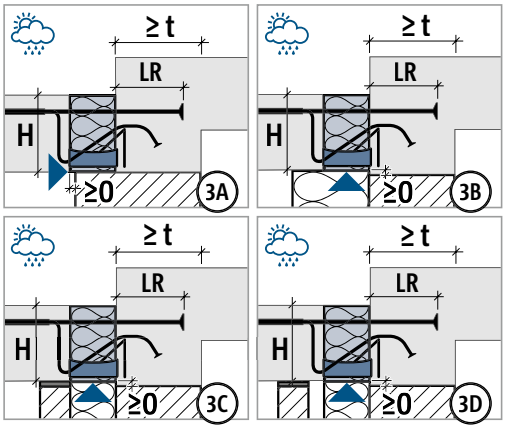


3A: Position outer edge Isokorb® in front of wall outer edge. 3B–3D: Position lower edge Isokorb® directly above lower edge of downstand beam.

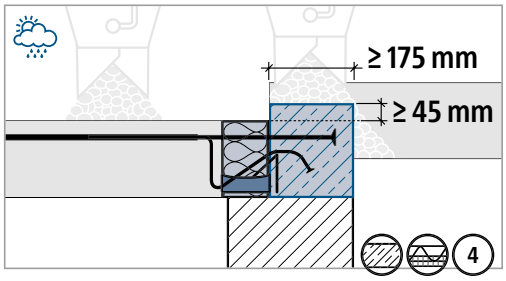


No working joint in the marked area, neither horizontal nor vertical. Concrete marked area in one pour!

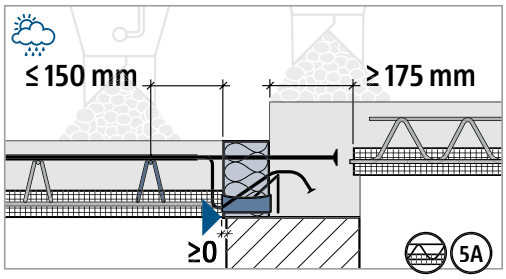


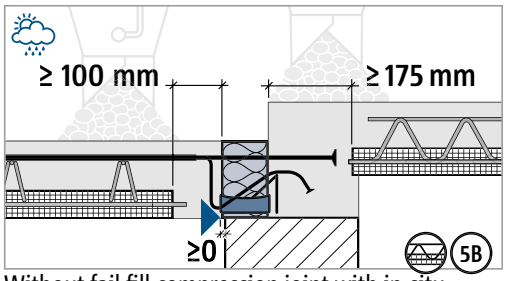


Without fail fill compression joint with in-situ concrete! Joint width ≥ 100 mm. Minimum downstand beam thickness ≥ t.

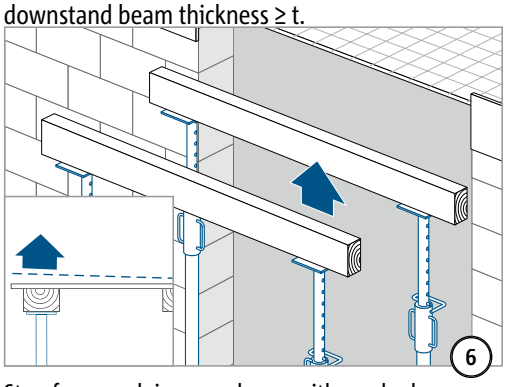


Step formwork in accordance with work plan.

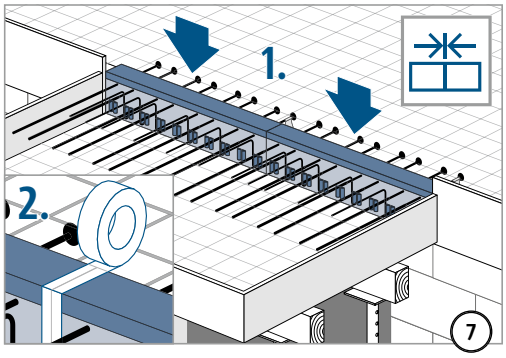

# Installation instructions – balcony with height offset downwards

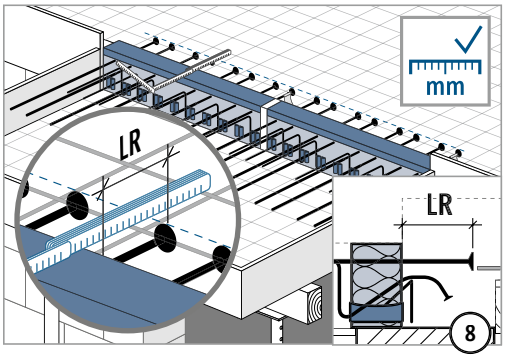


Check bond LR in accordance with type label!

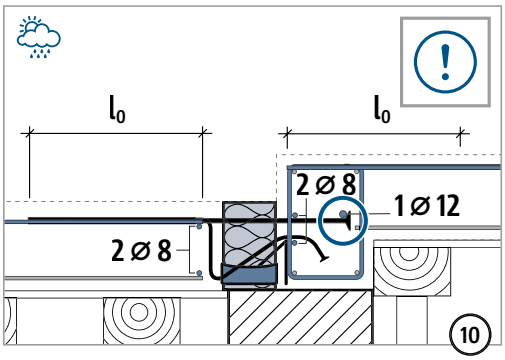


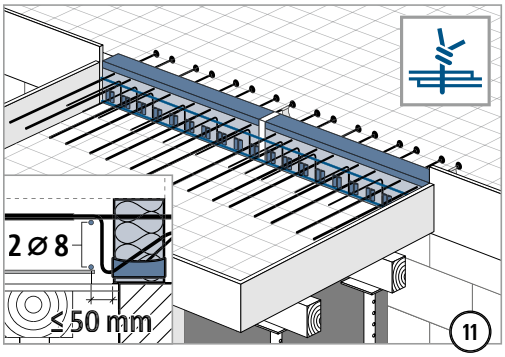


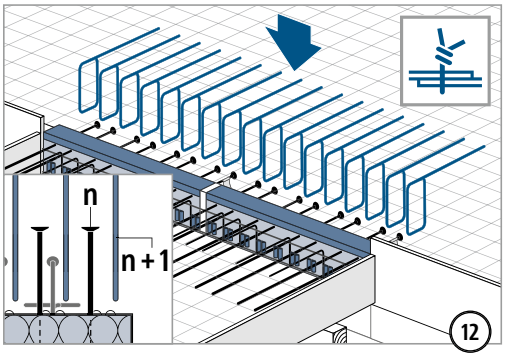


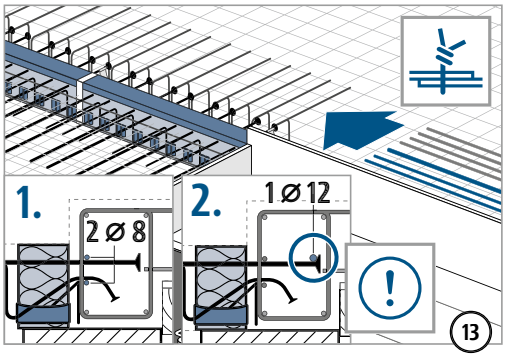


Tie supplementary bars with ⌀ ≥ 8 mm at crossing points. Tie supplementary bar with ⌀ ≥ 12 mm directly to tension bar using anchor head!

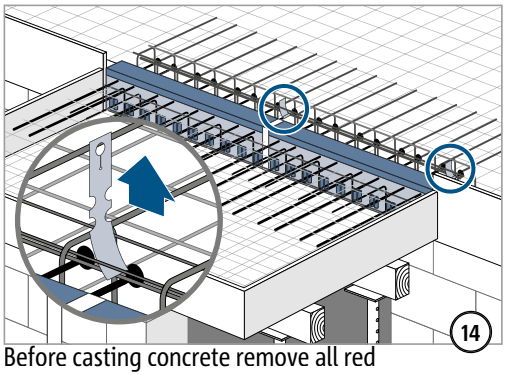

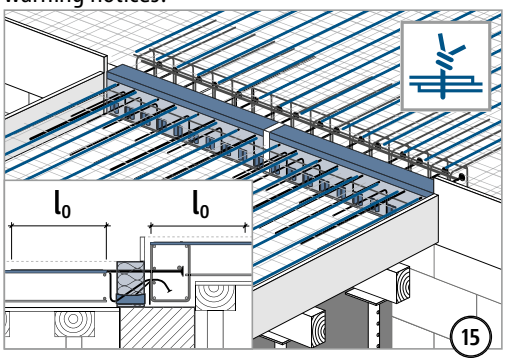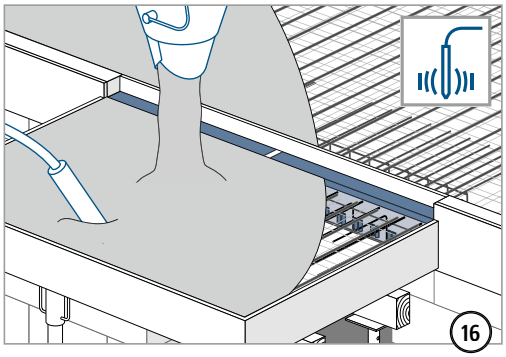
Before casting concrete remove all red warning notices!