Schöck Isokorb® T type B

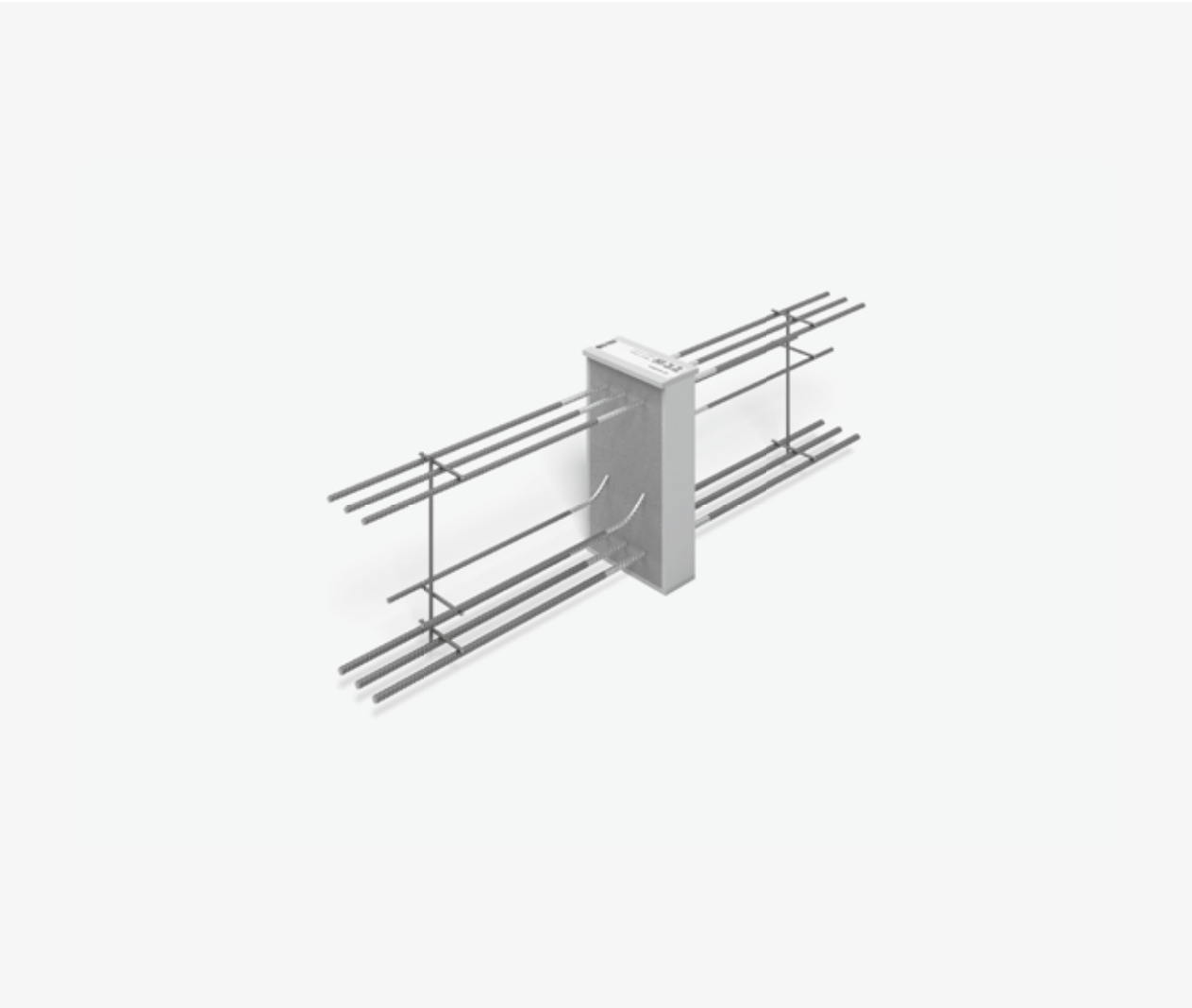

Schöck Isokorb® T type B
Load-bearing thermal insulation element for cantilever beams and downstand beams. The element transfers negative moments and positive shear forces.

Element arrangement | Installation cross sections

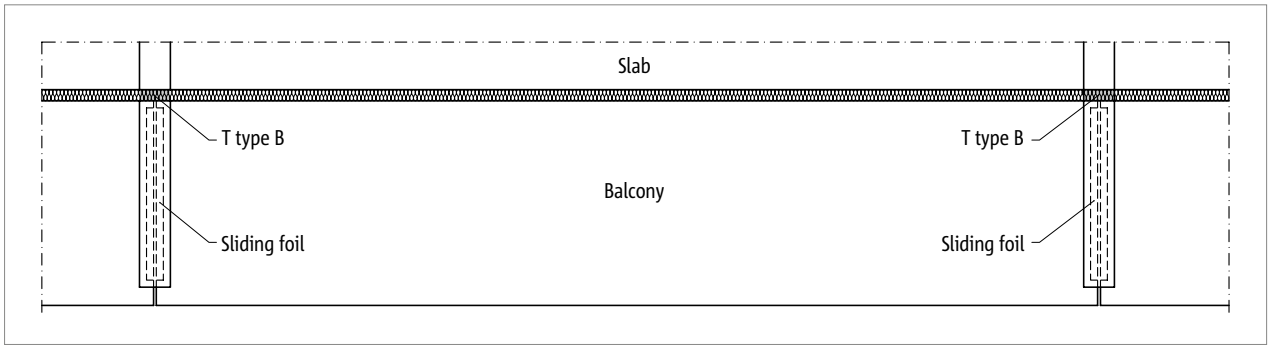

Fig. 161: Schöck Isokorb® T type B: Balcony construction with free cantilevered inner slab joists (precast balcony)

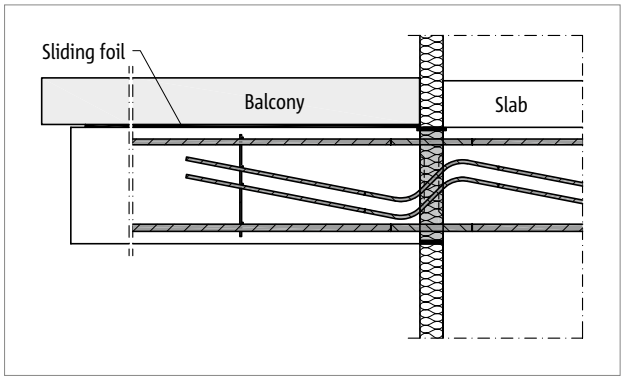

Fig. 162: Schöck Isokorb® T type B: Balcony structure with freely cantilevered downstand beams (precast balcony)

Product selection | Type designations

Schöck Isokorb® T type B variants

The configuration of the Schöck Isokorb® T type B can be varied as follows:

- Main load-bearing level:
  M5 to M8
- Secondary load-bearing level:
  V1 to V2
- Fire resistance class:
  R90: Top fire protection board, projecting on both sides by both 10 mm
- Isokorb® height:
  H_{min} to 600 mm
- Isokorb® length:
  L = 250 mm
  L is the horizontal Isokorb® length across the building envelope
- Generation:
  5.1

Type designations in planning documents

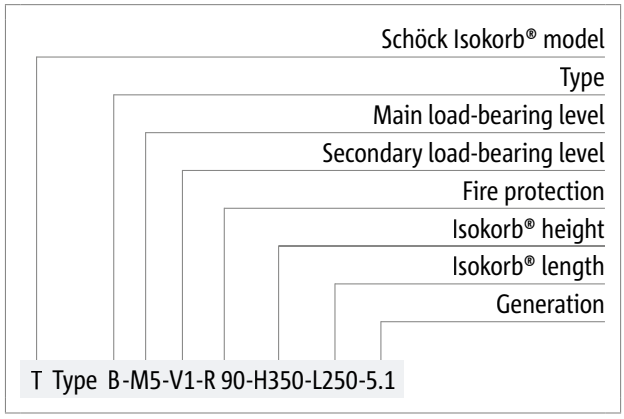

Design C25/30 | Torsional spring stiffness

Schöck Isokorb® T type B 5.1		M5	M6	M7	M8
Design values with		Concrete strength class ≥ C25/30			
		$M_{Rd,y}$ [kNm/element]			
Isokorb® height H [mm]	300	83.4	100.4	-	-
	350	107.6	129.1	147.2	-
	400	130.8	149.2	188.5	-
	450	157.7	179.3	219.6	257.2
	500	186.3	209.5	259.8	304.5
	600	248.9	269.7	340.2	420.0
		$V_{Rd,z}$ [kN/element]			
Secondary load-bearing level	V1	142.0	142.0	142.0	142.0
	V2	189.3	189.3	189.3	284.0

Schöck Isokorb® T type B 5.1	M5	M6	M7	M8
Placement with	Isokorb® length [mm]			
	250	250	250	250
Tension bars	3 ⌀ 20	4 ⌀ 20	5 ⌀ 20	6 ⌀ 20
Shear force bars V1	3 ⌀ 14	3 ⌀ 14	3 ⌀ 14	3 ⌀ 14
Shear force bars V2	4 ⌀ 14	4 ⌀ 14	4 ⌀ 14	6 ⌀ 14
Compression bars	3 ⌀ 25	3 ⌀ 25	4 ⌀ 25	6 ⌀ 25
H_{min} for V1 [mm]	300	300	350	450
H_{min} with V2 [mm]	400	400	450	500

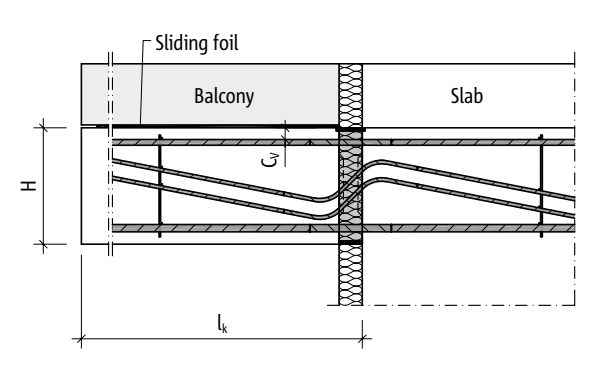

Fig. 163: Schöck Isokorb® T type B: Static system

Schöck Isokorb® T type B 5.1		M5	M6	M7	M8
Torsion spring stiffness for		Concrete strength class ≥ C25/30			
		C [kNm/rad]			
Isokorb® height H [mm]	300	11083	11121	-	-
	350	17683	18327	19039	-
	400	25818	27322	29572	-
	450	35489	38107	42416	49000
	500	46694	50682	57569	67881
	600	73710	81203	94806	114851

Fatigue/Temperature effect

Sliding foil for the fatigue resistance

Balcony slabs, passageway walks and canopy constructions expand when heated and contract when cooled. The changes in length associated with this temperature stress can transmit horizontal forces to the substructure. This can affect cantilevered beams that are connected to the building with the Schöck Isokorb®. In order to prevent material fatigue and cantilever beam failure over the planned service life, sliding foil should be used. The sliding foil must be installed between the cantilevered beam and the balcony slab in order to limit the lateral deflection of the Schöck Isokorb® bars due to temperature stress to the fatigue-proof area.

The balcony slab lying on the cantilevered beam must be secured against excessive horizontal displacement in order to secure its position and stability.

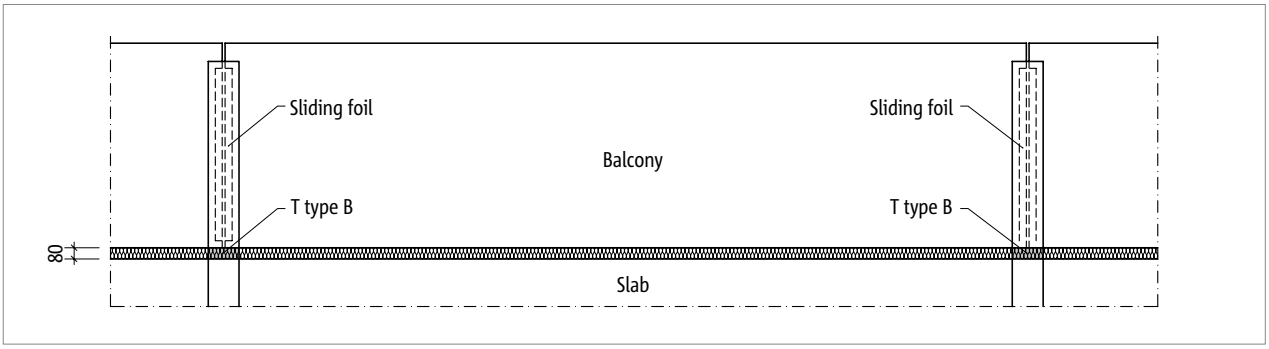

Fig. 164: Schöck Isokorb® T type B: Layout; fatigue resistance due to the sliding foil between the balcony slab and cantilevered beams

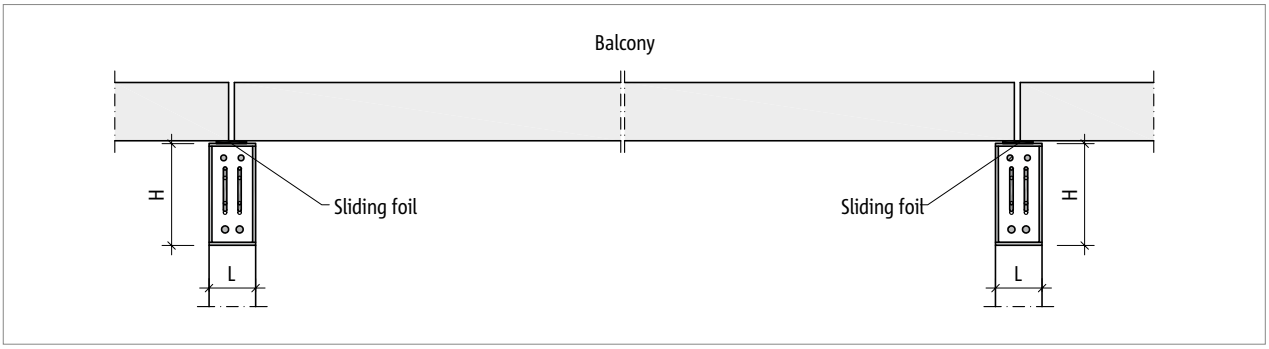

Fig. 165: Schöck Isokorb® T type B: Cross-section; fatigue resistance via the sliding foil between the balcony slab and cantilevered beams

i Sliding foil

- Sliding foil: Dynamic friction coefficient $\mu_G \leq 0.03$

Product description

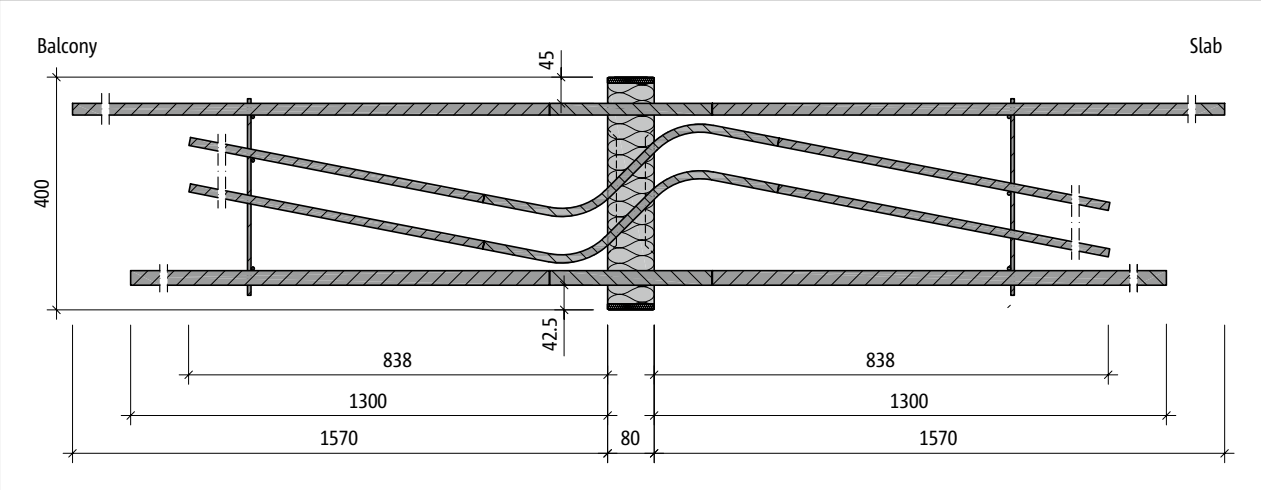

Fig. 166: Schöck Isokorb® T type B-M5-V2 in height H400: Product section

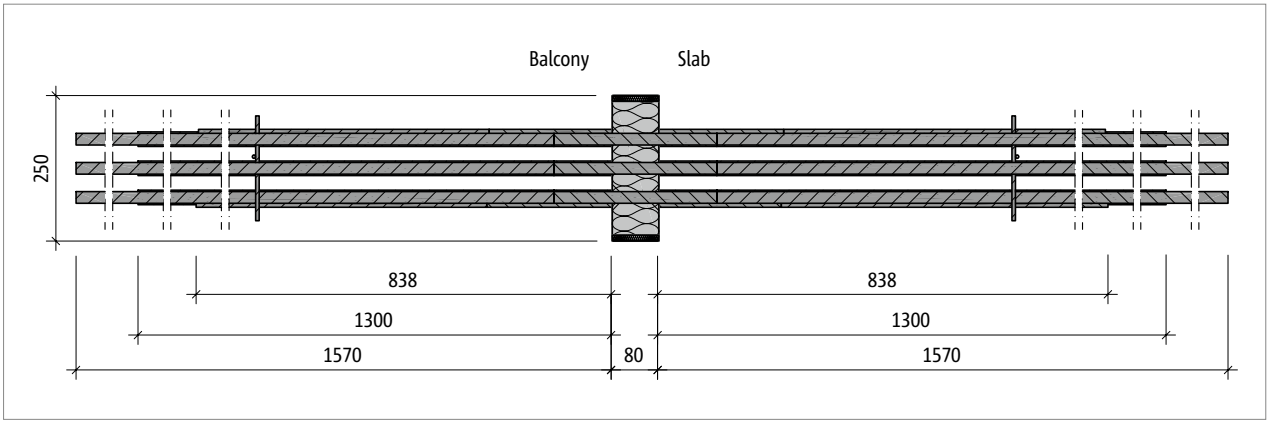

Fig. 167: Schöck Isokorb® T type B-M5-V2: Product layout

Product description

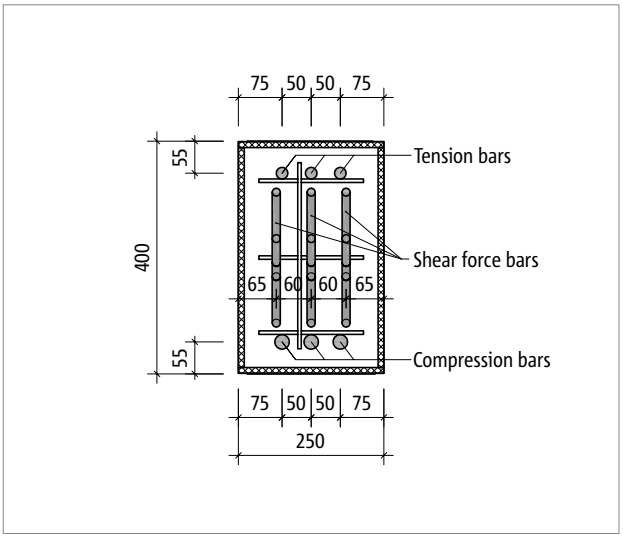

Fig. 168: Schöck Isokorb® T type B-M5-V1 in height H400: Product view

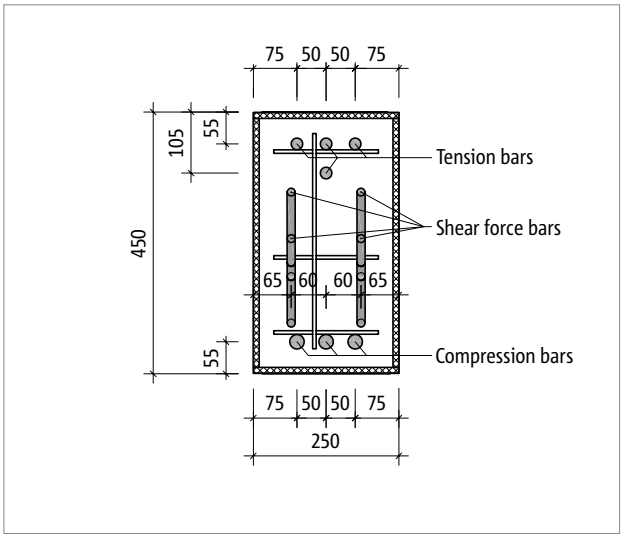

Fig. 169: Schöck Isokorb® T type B-M6-V2 in height H450: Product layout

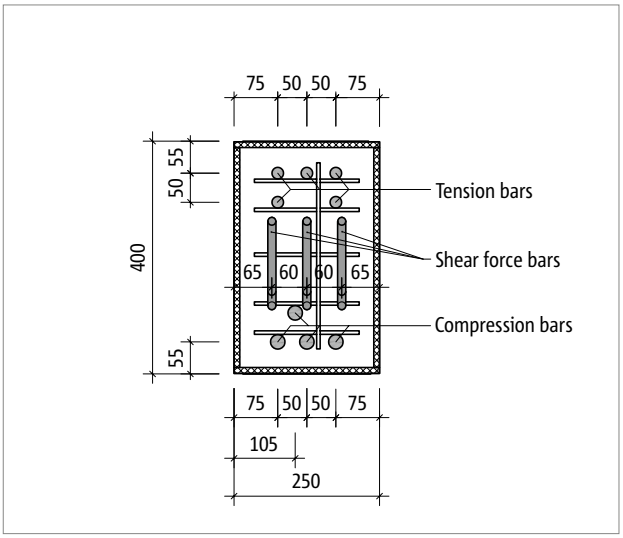

Fig. 170: Schöck Isokorb® T type B-M7-V1 in height H400: Product layout

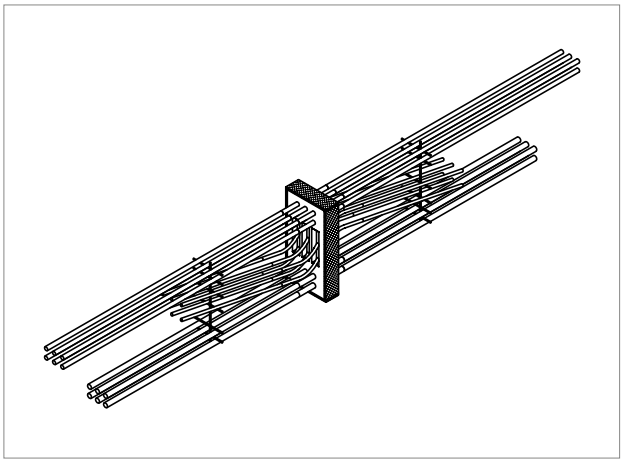

Fig. 171: Schöck Isokorb® T type B: Perimeter fire protection boards

Product information

- For additional 2D and 3D product drawings contact our Design Support department.

On-site reinforcement

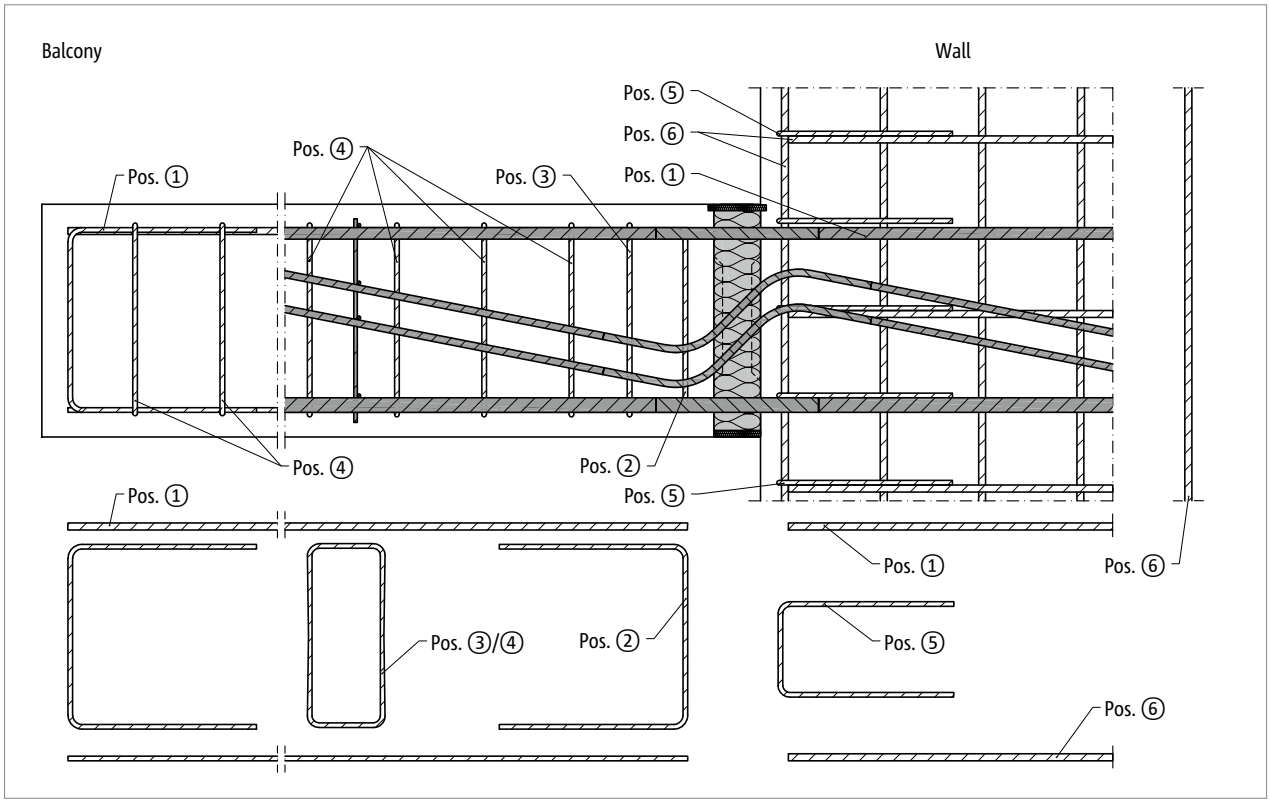

Fig. 172: Schöck Isokorb® T type B: On site reinforcement (cross-section)

Suggestion for on site reinforcement

Details of the on-site reinforcement for Schöck Isokorb® with a loading of 100 % of the maximum design moment with concrete strength class C25/30.

Schöck Isokorb® T type B 5.1	M5	M5	M6	M6	M7	M7	M8	M8
	V1	V2	V1	V2	V1	V2	V1	V2
On-site reinforcement	Concrete strength class ≥ C25/30							
Overlapping reinforcement								
Pos. 1	acc. to the specifications of the structural engineer							
Suspension reinforcement								
Pos. 2 [mm²]	163	218	163	218	163	218	163	326
Suspension reinforcement								
Pos. 3 [mm²]	245	326	245	326	245	326	245	490
Stirrup								
Pos. 4	acc. to the specifications of the structural engineer							
Supplementary edge reinforcement								
Pos. 5	acc. to the specifications of the structural engineer							
Wall reinforcement and overlap reinforcement shear force bar								
Pos. 6	acc. to the specifications of the structural engineer							

☑ Check list

- ☐ Have the loads on the Schöck Isokorb® connection been specified at design level?
- ☐ Has the cantilevered system length or the system support width been taken as a basis?
- ☐ Is the relevant concrete strength class taken into account when selecting the design and calculation table?
- ☐ With the selection of the design table is the relevant concrete cover taken into account?
- ☐ Have the fire protection requirements been clarified?
- ☐ Have the requirements for on-site reinforcement of connections been defined in each case?
- ☐ Has the additional proportionate deflection resulting from the Schöck Isokorb® been taken into account?
- ☐ Is the drainage direction taken into account with the resulting camber information? Is the degree of camber entered in the working drawings?
- ☐ Is a sliding foil with the dynamic friction coefficient $\mu_G \leq 0.03$ specified for between the balcony slabs and the cantilevered supports?
- ☐ Is the balcony supported on the cantilevered beams secured against horizontal displacement?
- ☐ Is the type designation of the Schöck Isokorb® explicit in the plans? - Example: Schöck Isokorb® T type B-M3-V2-R90-H400-L250-SC4