Schöck Isokorb® T type D

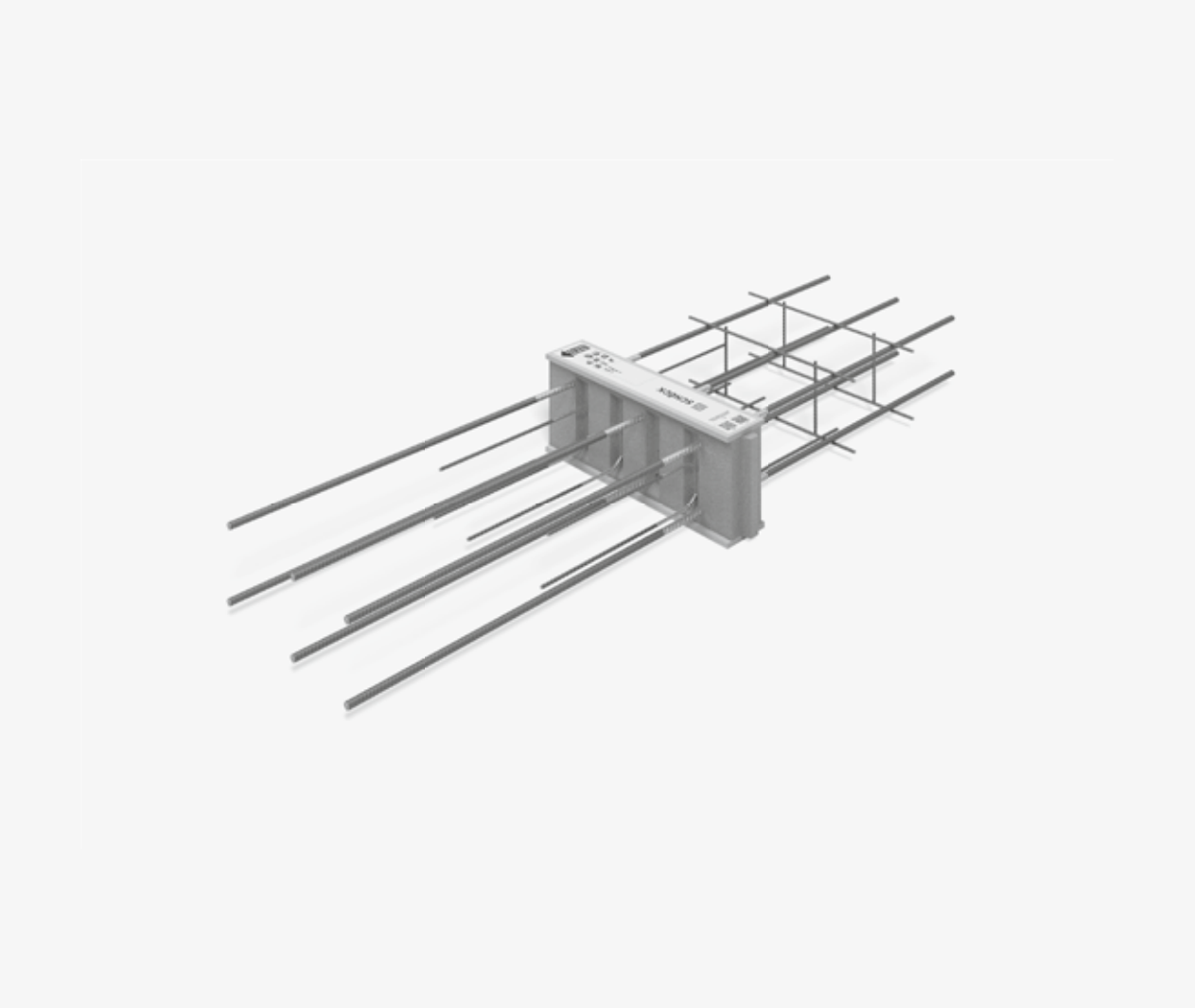

Schöck Isokorb® T type D
Load-bearing thermal insulation element for continuous flooring. The element transfers moments and shear forces.

Element arrangement | Installation cross sections

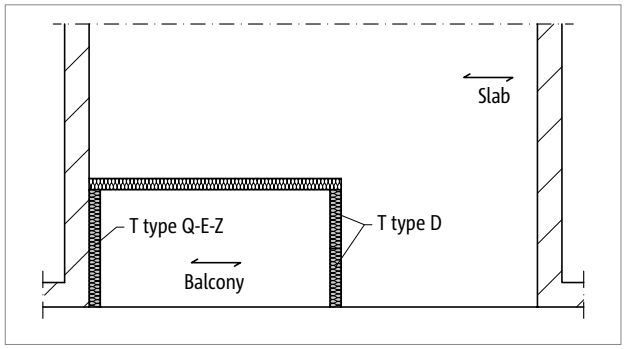

Fig. 150: Schöck Isokorb® T type D, Q-E-Z: One-way reinforced floor

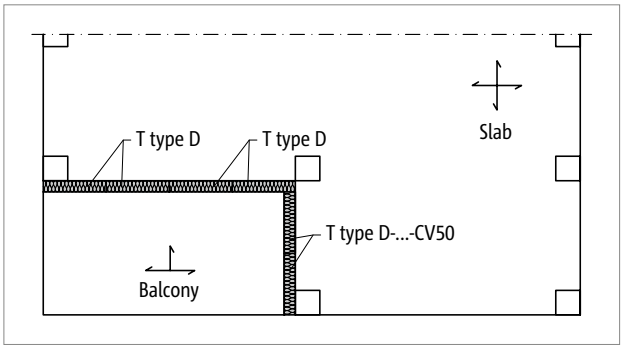

Fig. 151: Schöck Isokorb® T type D: Use in flat slabs

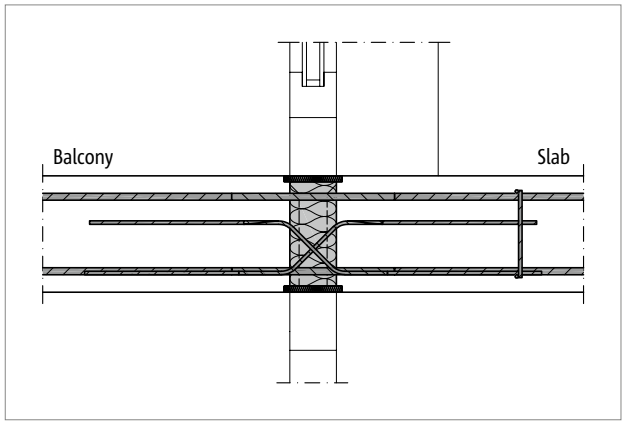

Fig. 152: Schöck Isokorb® T type D: Installation section; one-way reinforced floor

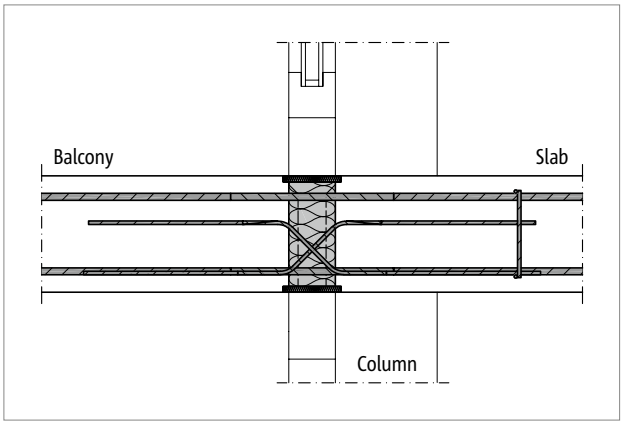

Fig. 153: Schöck Isokorb® T type D: Installation section; flat slab

Element arrangement

- When connecting across a corner with Schöck Isokorb® T type D, a T type D-CV50 (2nd layer) is required in one axial direction. The resulting minimum slab thickness is therefore 200 mm, depending on the selected secondary load-bearing level.

Product selection | Type designations | Special designs

Schöck Isokorb® T type D variants

The configuration of the Schöck Isokorb® T type D can be varied as follows:

- Main load-bearing level:
  MM1 to MM6
- Secondary load-bearing level:
  VV1 to VV5
- Fire resistance class:
  REI120: Fire protection board at top and bottom, projecting by 10 mm on both sides
- Concrete cover of the tension bars:
  CV30: Top CV = 30 mm, bottom CV = 30 mm
  CV35: Top CV = 35 mm, bottom CV = 30 mm
  CV50: Top CV = 50 mm, bottom CV = 50 mm
- Isokorb® height:
  H = H_{min} up to 280 mm (H_{min} depends on concrete cover and shear force load-bearing level see page 94)
- Isokorb® length:
  L = 500 mm
- Generation:
  6.0

Type designation in planning documents

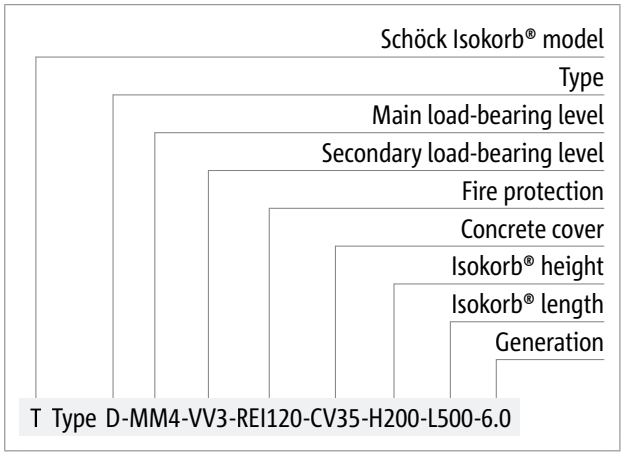

Special designs

Please contact the Technical Design Department if you cannot achieve the connections you require using the standard product variants shown in this technical information (contact details on page 3).

Design

Notes on design

- A static verification is to be provided for the adjacent reinforced concrete structural component on both sides of the Schöck Isokorb®.
- The Schöck Isokorb® T type D transfers bending moments $m_{Rd,y}$ and shear forces $v_{Rd,z}$. The Schöck Isokorb® does not transfer torsional moments

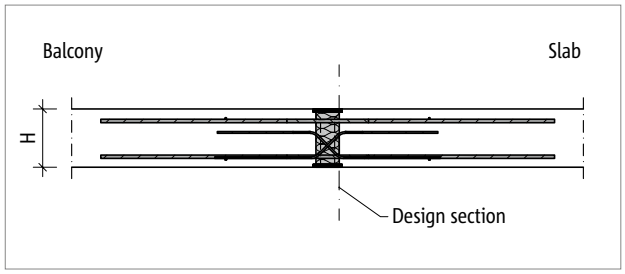

Fig. 154: Schöck Isokorb® T type D: Static system

Design C25/30

Schöck Isokorb® T type D-MM1 to MM6 is only available in length L = 500 mm

Schöck Isokorb® T type D 6.0				MM1			MM2			MM3		
				VV1	VV2	VV3	VV1	VV2	VV3	VV1	VV2	VV3
Design values with	Concrete cover CV [mm]			Concrete strength class ≥ C25/30								
	CV30	CV35	CV50	$m_{Rd,y}$ [kNm/m]								
Isokorb® height H [mm]		160		±14.9	±14.2	-	±22.4	-	-	±30.6	-	-
	160		200	±15.8	±15.1	-	±23.7	-	-	±32.4	-	-
		170		±16.7	±15.9	±14.0	±25.1	±23.2	-	±34.3	±32.4	-
	170		210	±17.6	±16.8	±14.8	±26.4	±24.4	-	±36.1	±34.1	-
		180		±18.5	±17.6	±15.5	±27.8	±25.7	±23.5	±37.9	±35.8	±33.7
	180		220	±19.4	±18.5	±16.3	±29.1	±26.9	±24.7	±39.8	±37.6	±35.3
		190		±20.3	±19.3	±17.0	±30.5	±28.2	±25.8	±41.6	±39.3	±37.0
	190		230	±21.2	±20.2	±17.8	±31.8	±29.4	±27.0	±43.5	±41.1	±38.6
		200		±22.1	±21.0	±18.6	±33.2	±30.7	±28.1	±45.3	±42.8	±40.2
	200		240	±23.0	±21.9	±19.3	±34.5	±31.9	±29.3	±47.1	±44.5	±41.9
		210		±23.9	±22.8	±20.1	±35.9	±33.2	±30.4	±49.0	±46.3	±43.5
	210		250	±24.8	±23.6	±20.8	±37.2	±34.4	±31.5	±50.8	±48.0	±45.2
		220		±25.7	±24.5	±21.6	±38.6	±35.7	±32.7	±52.7	±49.8	±46.8
	220		260	±26.6	±25.3	±22.3	±39.9	±36.9	±33.8	±54.5	±51.5	±48.4
		230		±27.5	±26.2	±23.1	±41.3	±38.2	±35.0	±56.4	±53.3	±50.1
	230		270	±28.4	±27.0	±23.8	±42.6	±39.4	±36.1	±58.2	±55.0	±51.7
		240		±29.3	±27.9	±24.6	±44.0	±40.7	±37.3	±60.0	±56.7	±53.3
	240		280	±30.2	±28.7	±25.3	±45.3	±41.9	±38.4	±61.9	±58.5	±55.0
		250		±31.1	±29.6	±26.1	±46.7	±43.2	±39.6	±63.7	±60.2	±56.6
	250			±32.0	±30.5	±26.8	±48.0	±44.4	±40.7	±65.6	±62.0	±58.2
		260		±32.9	±31.3	±27.6	±49.4	±45.6	±41.8	±67.4	±63.7	±59.9
	260			±33.8	±32.2	±28.4	±50.7	±46.9	±43.0	±69.2	±65.4	±61.5
		270		±34.7	±33.0	±29.1	±52.1	±48.1	±44.1	±71.1	±67.2	±63.2
	270			±35.6	±33.9	±29.9	±53.4	±49.4	±45.3	±72.9	±68.9	±64.8
		280		±36.5	±34.7	±30.6	±54.8	±50.6	±46.4	±74.8	±70.7	±66.4
	280			±37.4	±35.6	±31.4	±56.1	±51.9	±47.6	±76.6	±72.4	±68.1
				$v_{Rd,z}$ [kN/m]								
Secondary load-bearing level		VV1 – VV3		±34.8	±52.2	±92.7	±52.2	±92.7	±134.4	±52.2	±92.7	±134.4

Schöck Isokorb® T type D 6.0	MM1			MM2			MM3		
	VV1	VV2	VV3	VV1	VV2	VV3	VV1	VV2	VV3
Placement with	Isokorb® length [mm]								
	500								
Tension bars/compression members	2 × 2 ⌀ 12			2 × 3 ⌀ 12			2 × 4 ⌀ 12		
Shear force bars	2 × 2 ⌀ 6	2 × 3 ⌀ 6	2 × 3 ⌀ 8	2 × 3 ⌀ 6	2 × 3 ⌀ 8	2 × 3 ⌀ 10	2 × 3 ⌀ 6	2 × 3 ⌀ 8	2 × 3 ⌀ 10
H_{min} with CV30 [mm]	160	160	170	160	170	180	160	170	180
H_{min} with CV35 [mm]	160	160	170	160	170	180	160	170	180
H_{min} with CV50 [mm]	200	200	210	200	210	220	200	210	220

Design C25/30

Schöck Isokorb® T type D-MM1 to MM6 is only available in length L = 500 mm

Schöck Isokorb® T type D 6.0				MM4				
				VV1	VV2	VV3	VV4	VV5
Design values with	Concrete cover CV [mm]			Concrete strength class ≥ C25/30				
	CV30	CV35	CV50	$m_{Rd,y}$ [kNm/m]				
Isokorb® height H [mm]		160		±38.8	-	-	-	-
	160		200	±41.1	-	-	-	-
		170		±43.4	±41.5	-	-	-
	170		210	±45.8	±43.8	-	-	-
		180		±48.1	±46.0	±43.9	±41.6	-
	180		220	±50.4	±48.2	±46.0	±43.6	-
		190		±52.8	±50.5	±48.1	±45.6	-
	190		230	±55.1	±52.7	±50.2	±47.6	±41.8
		200		±57.4	±54.9	±52.4	±49.6	±43.5
	200		240	±59.8	±57.2	±54.5	±51.6	±45.3
		210		±62.1	±59.4	±56.6	±53.7	±47.1
	210		250	±64.4	±61.6	±58.8	±55.7	±48.8
		220		±66.8	±63.9	±60.9	±57.7	±50.6
	220		260	±69.1	±66.1	±63.0	±59.7	±52.4
		230		±71.4	±68.3	±65.1	±61.7	±54.1
	230		270	±73.8	±70.6	±67.3	±63.7	±55.9
		240		±76.1	±72.8	±69.4	±65.8	±57.7
	240		280	±78.4	±75.0	±71.5	±67.8	±59.5
		250		±80.8	±77.3	±73.7	±69.8	±61.2
	250			±83.1	±79.5	±75.8	±71.8	±63.0
		260		±85.4	±81.7	±77.9	±73.8	±64.8
	260			±87.8	±84.0	±80.1	±75.8	±66.5
		270		±90.1	±86.2	±82.2	±77.9	±68.3
	270			±92.5	±88.4	±84.3	±79.9	±70.1
		280		±94.8	±90.7	±86.4	±81.9	±71.8
	280			±97.1	±92.9	±88.6	±83.9	±73.6
$v_{Rd,z}$ [kN/m]								
Secondary load-bearing level		VV1 – VV5		±52.2	±92.7	±134.4	±179.2	±278.2

Schöck Isokorb® T type D 6.0	MM4				
	VV1	VV2	VV3	VV4	VV5
Placement with	Isokorb® length [mm]				
	500				
Tension bars/compression members	2 × 5 ⌀ 12				
Shear force bars	2 × 3 ⌀ 6	2 × 3 ⌀ 8	2 × 3 ⌀ 10	2 × 4 ⌀ 10	2 × 4 ⌀ 12
H_{min} with CV30 [mm]	160	170	180	180	190
H_{min} with CV35 [mm]	160	170	180	180	200
H_{min} with CV50 [mm]	200	210	220	220	230

Design C25/30

Schöck Isokorb® T type D-MM1 to MM6 is only available in length L = 500 mm

Schöck Isokorb® T type D 6.0				MM5				
				VV1	VV2	VV3	VV4	VV5
Design values with	Concrete cover CV [mm]			Concrete strength class ≥ C25/30				
	CV30	CV35	CV50	$m_{Rd,y}$ [kNm/m]				
Isokorb® height H [mm]		160		±46.9	-	-	-	-
	160		200	±49.8	-	-	-	-
		170		±52.6	±50.7	-	-	-
	170		210	±55.4	±53.4	-	-	-
		180		±58.2	±56.2	±54.0	±51.7	-
	180		220	±61.1	±58.9	±56.6	±54.2	-
		190		±63.9	±61.6	±59.3	±56.7	-
	190		230	±66.7	±64.3	±61.9	±59.2	±53.4
		200		±69.6	±67.1	±64.5	±61.7	±55.7
	200		240	±72.4	±69.8	±67.1	±64.3	±57.9
		210		±75.2	±72.5	±69.7	±66.8	±60.2
	210		250	±78.0	±75.2	±72.4	±69.3	±62.4
		220		±80.9	±78.0	±75.0	±71.8	±64.7
	220		260	±83.7	±80.7	±77.6	±74.3	±67.0
		230		±86.5	±83.4	±80.2	±76.8	±69.2
	230		270	±89.4	±86.1	±82.9	±79.3	±71.5
		240		±92.2	±88.9	±85.5	±81.8	±73.8
	240		280	±95.0	±91.6	±88.1	±84.3	±76.0
		250		±97.8	±94.3	±90.7	±86.8	±78.3
	250			±100.7	±97.1	±93.3	±89.4	±80.5
		260		±103.5	±99.8	±96.0	±91.9	±82.8
	260			±106.3	±102.5	±98.6	±94.4	±85.1
		270		±109.1	±105.2	±101.2	±96.9	±87.3
	270			±112.0	±108.0	±103.8	±99.4	±89.6
		280		±114.8	±110.7	±106.5	±101.9	±91.9
	280			±117.6	±113.4	±109.1	±104.4	±94.1
				$v_{Rd,z}$ [kN/m]				
Secondary load-bearing level		VV1 – VV5		±52.2	±92.7	±134.4	±179.2	±278.2

Schöck Isokorb® T type D 6.0	MM5				
	VV1	VV2	VV3	VV4	VV5
Placement with	Isokorb® length [mm]				
	500				
Tension bars/compression members	2 × 6 ⌀ 12				
Shear force bars	2 × 3 ⌀ 6	2 × 3 ⌀ 8	2 × 3 ⌀ 10	2 × 4 ⌀ 10	2 × 4 ⌀ 12
H_{min} with CV30 [mm]	160	170	180	180	190
H_{min} with CV35 [mm]	160	170	180	180	200
H_{min} with CV50 [mm]	200	210	220	220	230

Design C25/30

Schöck Isokorb® T type D-MM1 to MM6 is only available in length L = 500 mm

Schöck Isokorb® T type D 6.0				MM6				
				VV1	VV2	VV3	VV4	VV5
Design values with	Concrete cover CV [mm]			Concrete strength class ≥ C25/30				
	CV30	CV35	CV50	$m_{Rd,y}$ [kNm/m]				
Isokorb® height H [mm]		160		±62.9	-	-	-	-
	160		200	±66.8	-	-	-	-
		170		±70.7	±68.8	-	-	-
	170		210	±74.6	±72.6	-	-	-
		180		±78.4	±76.4	±74.3	±72.0	-
	180		220	±82.3	±80.2	±78.0	±75.6	-
		190		±86.2	±84.0	±81.7	±79.2	-
	190		230	±90.1	±87.7	±85.3	±82.7	±77.0
		200		±94.0	±91.5	±89.0	±86.3	±80.3
	200		240	±97.9	±95.3	±92.7	±89.9	±83.6
		210		±101.8	±99.1	±96.4	±93.4	±86.9
	210		250	±105.6	±102.9	±100.0	±97.0	±90.3
		220		±109.5	±106.7	±103.7	±100.6	±93.6
	220		260	±113.4	±110.4	±107.4	±104.1	±96.9
		230		±117.3	±114.2	±111.1	±107.7	±100.2
	230		270	±121.2	±118.0	±114.8	±111.3	±103.5
		240		±125.1	±121.8	±118.4	±114.8	±106.9
	240		280	±128.9	±125.6	±122.1	±118.4	±110.2
		250		±132.8	±129.4	±125.8	±122.0	±113.5
	250			±136.7	±133.1	±129.5	±125.5	±116.8
		260		±140.6	±136.9	±133.1	±129.1	±120.1
	260			±144.5	±140.7	±136.8	±132.7	±123.5
		270		±148.4	±144.5	±140.5	±136.2	±126.8
	270			±152.2	±148.3	±144.2	±139.8	±130.1
		280		±156.1	±152.0	±147.9	±143.4	±133.4
	280			±160.0	±155.8	±151.5	±146.9	±136.7
$v_{Rd,z}$ [kN/m]								
Secondary load-bearing level		VV1 – VV5		±52.2	±92.7	±134.4	±179.2	±278.2

Schöck Isokorb® T type D 6.0	MM6				
	VV1	VV2	VV3	VV4	VV5
Placement with	Isokorb® length [mm]				
	500				
Tension bars/compression members	2 × 6 ⌀ 14				
Shear force bars	2 × 3 ⌀ 6	2 × 3 ⌀ 8	2 × 3 ⌀ 10	2 × 4 ⌀ 10	2 × 4 ⌀ 12
H_{min} with CV30 [mm]	160	170	180	180	190
H_{min} with CV35 [mm]	160	170	180	180	200
H_{min} with CV50 [mm]	200	210	220	220	230

Torsional spring stiffness

Schöck Isokorb® T type D 6.0				MM1	MM2	MM3	MM4	MM5	MM6
Torsion spring stiffness for	Concrete cover CV [mm]			Concrete strength class ≥ C20/25					
	CV30	CV35	CV50	C [kNm/rad/m]					
Isokorb® height H [mm]		160		1247	1870	2493	3117	3740	4407
	160		200	1401	2102	2803	3503	4204	4968
		170		1565	2348	3130	3913	4695	5563
	170		210	1738	2607	3476	4345	5214	6191
		180		1920	2880	3840	4799	5759	6852
	180		220	2111	3166	4221	5277	6332	7548
		190		2311	3466	4621	5777	6932	8276
	190		230	2520	3779	5039	6299	7559	9039
		200		2738	4107	5475	6844	8213	9835
	200		240	2965	4447	5930	7412	8894	10664
		210		3201	4801	6402	8002	9603	11528
	210		250	3446	5169	6892	8615	10338	12424
		220		3700	5551	7401	9251	11101	13355
	220		260	3964	5945	7927	9909	11891	14319
		230		4236	6354	8472	10590	12708	15316
	230		270	4517	6776	9035	11293	13552	16347
		240		4808	7212	9616	12020	14423	17412
	240		280	5107	7661	10215	12768	15322	18510
		250		5416	8124	10832	13540	16247	19642
	250			5733	8600	11467	14334	17200	20807
		260		6060	9090	12120	15150	18180	22007
	260			6396	9594	12791	15989	19187	23239
		270		6740	10111	13481	16851	20221	24505
	270			7094	10641	14188	17735	21283	25805
		280		7457	11186	14914	18643	22371	27139
	280			7829	11743	15658	19572	23487	28506

Expansion joint spacing

Maximum expansion joint spacing

If the component length exceeds the maximum expansion joint spacing e, then expansion joints must be incorporated into the external concrete components at right angles to the insulating layer in order to limit the effect as a result of temperature changes. With fixed points such as, for example, corners of balconies, or with the employment of the supplementary Schöck Isokorb® T types H half the maximum expansion joint spacing e/2 from the fixed point applies.

Schöck Isokorb® T type D 6.0		MM1 VV1–VV3	MM2–MM5 VV1–VV2	MM2 VV3	MM3–MM5 VV3–VV4	MM3–MM5 VV5	MM6 VV1–VV4	MM6 VV5
Maximum expansion joint spacing when		e [m]						
Insulating element thickness [mm]	80	11.0	11.0	10.6	10.6	9.5	10.1	9.5

Edge distances

The Schöck Isokorb® must be so arranged at the expansion joint that the following conditions are met:

- For the centre distance of the tension bars from the free edge resp. from the expansion joint: $e_R \geq 50$ mm applies.
- For the centre distance of the compression bars from the free edge or the expansion joint the following applies: $e_R \geq 50$ mm and $e_R \leq 150$ mm.
- For the centre distance of the compression bars from the free edge resp. exapansion joint: $e_R \geq 100$ mm applies.

Product description

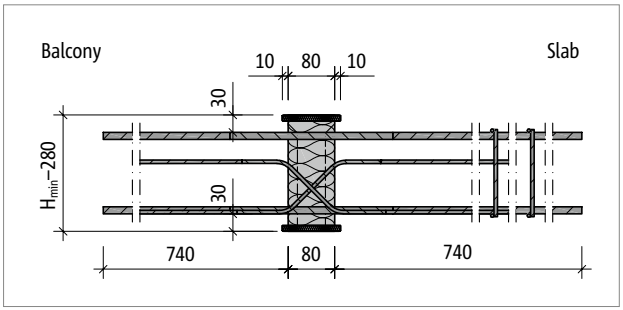

Fig. 155: Schöck Isokorb® T type D-MM1-VV1 to MM5-VV1 for CV30: Product section

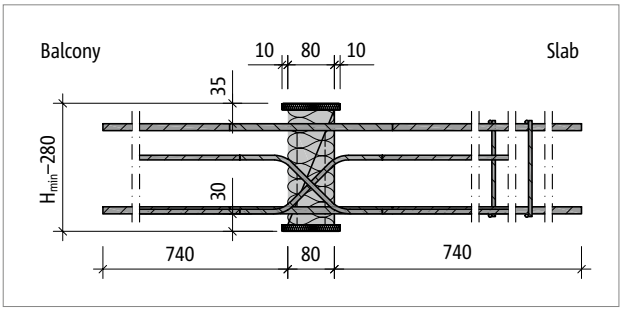

Fig. 156: Schöck Isokorb® T type D-MM1-VV1 to MM5-VV1 for CV35: Product section

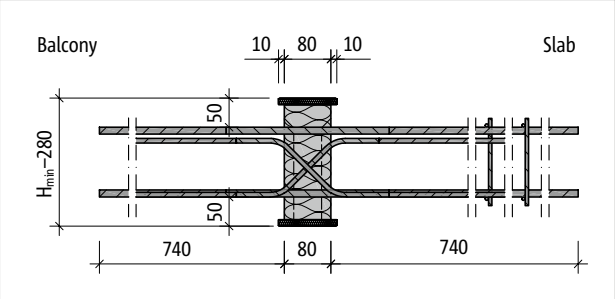

Fig. 157: Schöck Isokorb® T type D-MM1-VV1 to MM5-VV1 for CV50: Product section

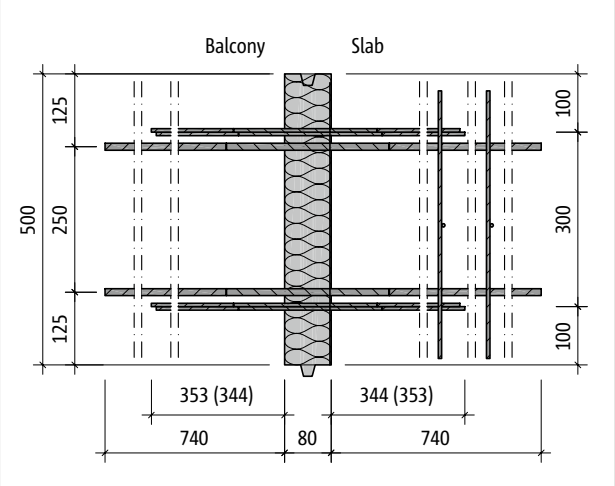

Fig. 158: Schöck Isokorb® T type D-MM1-VV1: Plan

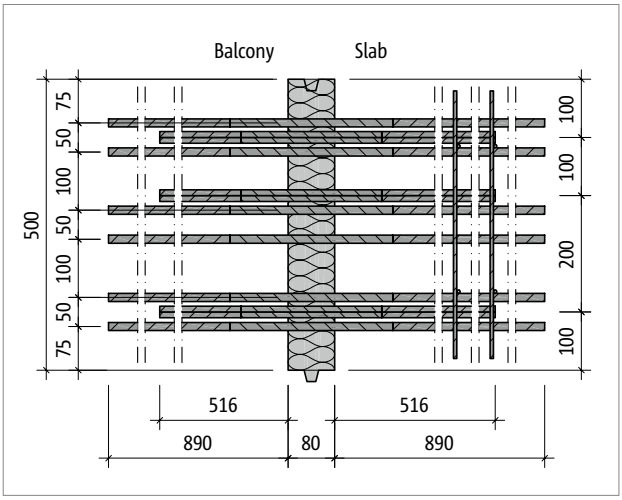

Fig. 159: Schöck Isokorb® T type D-MM6-VV3: Plan

Product information

- Download further product plan views and cross-sections at https://cad.schoeck.co.uk

On-site reinforcement

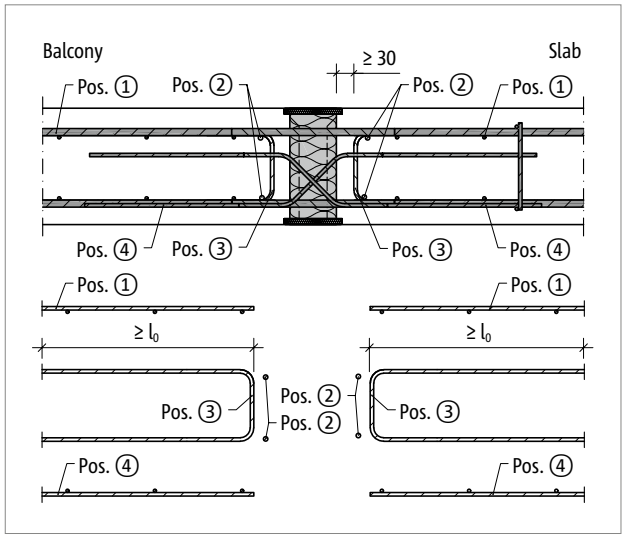

Fig. 160: Schöck Isokorb® T type D: On-site reinforcement

Information about on-site reinforcement

- The rules as per SS-EN 1992-1-1 (EC2) and SS-EN 1992-1-1/NA apply for calculating the lap length. A reduction of the required lap length with m_{Ed}/m_{Rd} is permitted. For the lapping (l) with Schöck Isokorb® a length of the tension bars of 710 mm is accounted for for type D
- Edge and suspension reinforcement (Pos. 3) is to be placed on both sides of the Isokorb® T type D.

On-site reinforcement

Schöck Isokorb® T type D-MM1 to MM6 is only available in length L = 500 mm

Schöck Isokorb® T type D 6.0				MM1			MM2		
				VV1	VV2	VV3	VV1	VV2	VV3
On-site reinforcement	CV30	CV35	CV50	Floor (XC1) concrete strength class ≥ C25/30 Balcony (XC4) concrete strength class ≥ C25/30					
	Height [mm]								
Lap reinforcement dependent on bar diameter (necessary for negative moment)									
Pos. 1 with ⌀8 [mm²/m]				486	503	467	729	693	679
Pos. 1 with ⌀10 [mm²/m]				514	545	524	772	750	725
Pos. 1 with ⌀12 [mm²/m]				543	588	580	814	807	796
Steel bars along the insulation joint									
Pos. 2				2 × 2 ⌀ 8					
Vertical reinforcement									
Pos. 3 [mm²/m]	160–170	160–180	200–210	113					
Pos. 3 [mm²/m]	180–280	190–280	220–280	113	120	213	120	213	313
Lap reinforcement dependent on bar diameter (necessary for positive moment)									
Pos. 4 with H8 [mm²/m]				486	503	467	729	693	679
Pos. 4 with H10 [mm²/m]				514	545	524	772	750	725
Pos. 4 with H12 [mm²/m]				543	588	580	814	807	796

Information about on-site reinforcement

- For information on the on-site reinforcement see page 101.

Schöck Isokorb® T type D-MM1 to MM6 is only available in length L = 500 mm

Schöck Isokorb® T type D 6.0				MM3				
				VV1	VV2	VV3	VV4	VV5
On-site reinforcement	CV30	CV35	CV50	Floor (XC1) concrete strength class ≥ C25/30 Balcony (XC4) concrete strength class ≥ C25/30				
	Height [mm]							
Lap reinforcement dependent on bar diameter (necessary for negative moment)								
Pos. 1 with ⌀8 [mm²/m]				955	919	905	905	905
Pos. 1 with ⌀10 [mm²/m]				998	976	951	966	905
Pos. 1 with ⌀12 [mm²/m]				1040	1033	1023	1062	905
Steel bars along the insulation joint								
Pos. 2				2 × 2 ⌀ 8				
Vertical reinforcement								
Pos. 3 [mm²/m]	160–170	160–180	200–210	113				
Pos. 3 [mm²/m]	180–280	190–280	220–280	120	213	313	417	640
Lap reinforcement dependent on bar diameter (necessary for positive moment)								
Pos. 4 with H8 [mm²/m]				955	919	905	905	905
Pos. 4 with H10 [mm²/m]				998	976	951	966	905
Pos. 4 with H12 [mm²/m]				1040	1033	1023	1062	905

Information about on-site reinforcement

- For information on the on-site reinforcement see page 101.

On-site reinforcement

Schöck Isokorb® T type D-MM1 to MM6 is only available in length L = 500 mm

Schöck Isokorb® T type D 6.0				MM4				
				VV1	VV2	VV3	VV4	VV5
On-site reinforcement	CV30	CV35	CV50	Floor (XC1) concrete strength class ≥ C25/30 Balcony (XC4) concrete strength class ≥ C25/30				
	Height [mm]							
Lap reinforcement dependent on bar diameter (necessary for negative moment)								
Pos. 1 with ⌀10 [mm²/m]				1224	1202	1177	1192	1131
Pos. 1 with ⌀12 [mm²/m]				1267	1259	1249	1288	1131
Pos. 1 with ⌀14 [mm²/m]				1409	1407	1402	1454	1265
Steel bars along the insulation joint								
Pos. 2				2 × 2 ⌀ 8				
Vertical reinforcement								
Pos. 3 [mm²/m]	160–170	160–180	200–210	113	113	125	113	128
Pos. 3 [mm²/m]	180–280	190–280	220–280	120	213	313	417	640
Lap reinforcement dependent on bar diameter (necessary for positive moment)								
Pos. 4 with H10 [mm²/m]				1224	1202	1177	1192	1131
Pos. 4 with H12 [mm²/m]				1267	1259	1249	1288	1131
Pos. 4 with ⌀14 [mm²/m]				1409	1407	1402	1454	1265

Information about on-site reinforcement

- For information on the on-site reinforcement see page 101.

Schöck Isokorb® T type D-MM1 to MM6 is only available in length L = 500 mm

Schöck Isokorb® T type D 6.0				MM5				
				VV1	VV2	VV3	VV4	VV5
On-site reinforcement	CV30	CV35	CV50	Floor (XC1) concrete strength class ≥ C25/30 Balcony (XC4) concrete strength class ≥ C25/30				
	Height [mm]							
Lap reinforcement dependent on bar diameter (necessary for negative moment)								
Pos. 1 with ⌀10 [mm²/m]				1450	1428	1403	1418	1357
Pos. 1 with ⌀12 [mm²/m]				1493	1485	1475	1514	1357
Pos. 1 with ⌀14 [mm²/m]				1658	1655	1650	1703	1513
Steel bars along the insulation joint								
Pos. 2				2 × 2 ⌀ 8				
Vertical reinforcement								
Pos. 3 [mm²/m]	160–170	160–180	200–210	113	113	156	139	213
Pos. 3 [mm²/m]	180–280	190–280	220–280	120	213	313	417	640
Lap reinforcement dependent on bar diameter (necessary for positive moment)								
Pos. 4 with H10 [mm²/m]				1450	1428	1403	1418	1357
Pos. 4 with H12 [mm²/m]				1493	1485	1475	1514	1357
Pos. 4 with ⌀14 [mm²/m]				1658	1655	1650	1703	1513

Information about on-site reinforcement

- For information on the on-site reinforcement see page 101.

On-site reinforcement

Schöck Isokorb® T type D-MM1 to MM6 is only available in length L = 500 mm

Schöck Isokorb® T type D 6.0				MM6				
				VV1	VV2	VV3	VV4	VV5
On-site reinforcement	CV30	CV35	CV50	Floor (XC1) concrete strength class ≥ C25/30 Balcony (XC4) concrete strength class ≥ C25/30				
	Height [mm]							
Lap reinforcement dependent on bar diameter (necessary for negative moment)								
Pos. 1 with ⌀12 [mm²/m]				1983	1975	1965	2004	1847
Pos. 1 with ⌀14 [mm²/m]				2025	2032	2037	2100	1932
Steel bars along the insulation joint								
Pos. 2				2 × 2 ⌀ 8				
Vertical reinforcement								
Pos. 3 [mm²/m]	160–170	160–180	200–210	113	113	156	139	213
Pos. 3 [mm²/m]	180–280	190–280	220–280	120	213	313	417	640
Lap reinforcement dependent on bar diameter (necessary for positive moment)								
Pos. 4 with H12 [mm²/m]				1983	1975	1965	2004	1847
Pos. 4 with ⌀14 [mm²/m]				2025	2032	2037	2100	1932

Information about on-site reinforcement

- For information on the on-site reinforcement see page 101.

Installation instructions

www.schoeck.com/view/6424

☑ Check list

- ☐ Have the loads on the Schöck Isokorb® connection been specified at design level?
- ☐ Has the cantilevered system length or the system support width been taken as a basis?
- ☐ Has the additional proportionate deflection resulting from the Schöck Isokorb® been taken into account?
- ☐ Are the maximum allowable expansion joint spacings taken into account?
- ☐ With the selection of the design table is the relevant concrete cover taken into account?
- ☐ Have the fire protection requirements been clarified?
- ☐ Has the minimum slab thickness (≥ 200 mm) and the required 2nd layer (CV50) been taken into account for a connection across a corner with Schöck Isokorb® T type D?
- ☐ Has the required cutout (width ≥ 760 mm from insulating element) been marked in the construction drawings for the Schöck Isokorb® T type D in conjunction with semi-precast balcony slabs and has the on site reinforcement been adjusted constructively?
- ☐ Has a Schöck Isokorb® T type Q-E-Z been selected for a connection free of constraint forces for 2- or 3-sided support?
- ☐ Have the requirements for on-site reinforcement of connections been defined in each case?
- ☐ Is there a statically undetermined construction for the design for which the stiffness of the Schöck Isokorb® must be taken into account?
- ☐ Does an impact load or another extraordinary load need to be taken into account for the design of the Schöck Isokorb®?
- ☐ Has a soft elastic joint been taken into account between the upper edge of the facing shell and the balcony?
- ☐ Is the type designation of the Schöck Isokorb® explicit in the plans? - Example: Schöck Isokorb® T type D-MM4-VV2-REI120-CV30-H280-L500